JA SOLAR
晶 澳 太 阳 能

JA SOLAR PV MODULES INSTALLATION MANUAL

Regular Modules

JA SOLAR HOLDINGS CO., LTD.
Building No.8, Nuode Center, Automobile Museum East Road, Fengtai District, Beijing, China
Tel: +86 (10) 63611888
Fax: +86 (10) 63611999

Don't step, stand or sit on modules while installing or cleaning.

IMPORTANT SAFETY INSTRUCTIONS

This manual contains important safety instructions for the Solar Photovoltaic Modules (hereafter referred to as “Modules”) of Shanghai JA Solar Technology Co., Ltd. (hereafter referred to as “JA Solar). Installers should follow all safety precautions described in this guide as well as local codes when installing a Module.

Installing solar photovoltaic systems requires specialized skills and knowledge. Installation should only be performed by qualified personnel.
Before installing a solar photovoltaic system, installers should familiarize themselves with its mechanical and electrical requirements. Keep this guide in a safe place for future reference and in case of sale or disposal of the Modules.

For any questions, please contact our Global Quality and Customer Service department for further information.

CONTENTS

1 Introduction 3
2 Codes and Regulations 3
3 General 3
1 Product Identification 3
2 Conventional Safety 4
3 Electrical Performance Safety 5
4 Operating Safety 5
5 Fire Safety 6
4 Installation Condition 6
1 Installation position and working environment 6
2 Tilt Angle Selection 7
5 Mechanical Installation 8
1 Tilt Angle Selection 8
2 Installation methods 8
6 Electrical Installation 13
1 Electrical Property 13
2 Cables and Wiring 14
3 Connectors 15
4 Bypass Diodes 15
7 Grounding 15
1 Grounding by using grounded clamp 15
2 Grounding by using unused mounting hole 16
3 Additional Third-party Grounding Devices 17
8 Operation and Maintenance 17
1 Cleaning 17
2 The visual inspection of the Modules 18
3 Inspection of the connector and the cable 18
PRODUCT SUPPLEMENT 18

1 INTRODUCTION

Thank you for choosing JA SOLAR modules!

This Installation Manual contains essential information for electrical and mechanical installation that you must know before handling, installing JA Solar Modules. This Manual also contains safety information you need to be familiar with. All the information described in this Manual is the intellectual property of JA Solar and is based on the technologies and experience that have been acquired and accumulated by JA Solar.

This Manual does not constitute a warranty, expressed or implied. JA Solar does not assume responsibility and expressly disclaims liability for loss, damage, or expense arising out of or in any way connected with installation, operation, use or maintenance of Modules. No responsibility is assumed by JA Solar for any infringement of patents or other rights of third parties that may result from use of Modules. JA Solar reserves the right to make changes to the product, specifications or installation manual without prior notice.

Failure to comply with the requirements listed in this manual will invalidate the Limited Warranty for Modules as provided by JA Solar at the same time of sale to the direct customer. Additional recommendations are provided to enhance safety practices and performance results. Please provide a copy of this manual to the PV system owner for their reference, and inform them of all relevant aspects of safety, operation, and maintenance.

2 Codes and Regulations

The mechanical and electrical installation of PV systems should be performed in accordance with all applicable codes, including electrical codes, building codes and electric utility interconnect requirements. Such requirements may vary for mounting location, such as building rooftop or motor vehicle applications. Requirements may also vary with system voltage, and for DC or AC application. Contact local authorities for governing regulations.

3 General

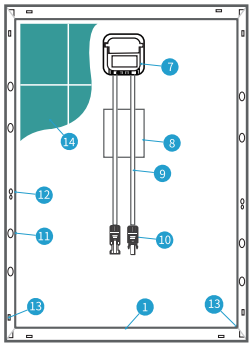

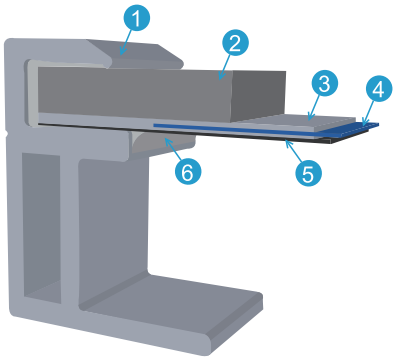

1. Aluminum Frame	2. Glass	3. Encapsulating EVA	4. Cell	5. Backsheet	6. Silicone adhesive
7. Juntion Box	8. Cable	9. Label	10. Connector	11. Mounting hole	12. Grounding hole
13. Drainage holes	14. Cell				

1. Product Identification

Each module has three labels providing the following information:

1. Nameplate: describes the product type; Peak power, Max. power current, Max. power voltage, open circuit voltage, short circuit current, all as measured under standard test conditions; Certifications mark,the maximum system voltge etc.

2. Current Sorting: Modules are sorted out according to their Max. power current, referred as a corresponding symbol "Current class X" attached, in which x takes the value H, M or L(H marks physically the highest current). To get optimal performance out of a string of Modules it is recommended to connect only Modules of the same "Current class X" class (for example only H Modules) in one given string.We recommend the modules with and without LRF should not be installed in a string, even if they are the same current class.

3. Barcode: each individual module has a unique serial number. The serial numbers have 16 digits. The 1st and the 2nd digits are the year code, and the 3th is the month code (A, B, C stands for October, November and December respectively). For example, 121PXXXXXXXXXXXX means the module was assembled and tested in the January of 2012. Each module has only one bar code. It is permanently attached to the interior of the module and is visible from the top front of the module. This bar code is inserted prior to laminating. In addition, you can find a same barcode at the nameplate beside.

2. Conventional Safety

JA Solar Modules are designed to meet the requirements of IEC 61215 and IEC 61730, application class A. Modules rated for use in this application class may be used in system operating at greater than 50V DC or 240W, where general contact access is anticipated. Modules qualified for safety through IEC 61730-1 and IEC 61730-2 and within this application class are considered to meet the requirements for safety class II equipment.

When Modules are mounted on rooftops, the roof must have a fire resistant covering suitable for this application. Rooftop PV systems should only be installed on rooftop to be capable of handling the additional weighted load of PV system components, including Modules, by a certified building specialist or engineer and have a formal structure of the complete analysis result.

For your safety, do not attempt to work on a rooftop until safety precautions have been identified and taken, including without limitation fall protection measures, ladders or stairways, and personal protective equipment.

For your safety, do not install or handle Modules under adverse conditions, including without limitation strong or gusty winds, and wet or frosted roof surfaces.

3. Electrical Performance Safety

Photovoltaic Modules can produce DC electricity when exposed to light and therefore can produce an electrical shock or burn. DC voltage of 30 Volts or higher is potentially lethal.

Modules produce voltage even when not connected to an electrical circuit or load. Please use insulated tools and rubber gloves when working with Modules in sunlight.

Modules have no on/off switch. Modules can be rendered inoperative only by removing them from sunlight, or by fully covering their front surface with cloth, cardboard, or other completely opaque material, or by working with Modules face down on a smooth, flat surface.

In order to avoid arcs and electrical shock, please do not disconnect electrical connections under load. Faulty connections can also result in arcs and electrical shock. So please keep connectors dry and clean, and ensure that they are in proper working condition. Never insert metal objects into the connector, or modify them in any way in order to secure an electrical connection.

Also in order to avoid the sand or water vapor entering which may cause the connection and safety issue, the modules need to be installed and connected to the combiner box once they are taken out from the carton box; keep the connectors dry and clean during the installing. Note that the pollution from sand, dust and water will result in arcs and electrical shock of connectors. We suggest the customers add rubber connector covers as the protection method specific to the area with heavy dust seaside with higher salinity or the serious polluted areas.

Reflection from snow or water can increase sunlight and therefore boost current and power. In addition, colder temperatures can substantially increase voltage and power.

If the glass or other material is damaged, please wear personal protection equipment and separated the module from the circuit.

Work only under dry conditions, and use only dry tools. Do not handle Modules when they are wet unless wearing appropriate protective equipment. If you need to clean the Modules, please follow the cleaning requirements mentioned in the manual.

4. Operating Safety

Do not open the package of JA Solar Modules during transportation and storing until they are ready to be installed.

At the same time please protect the package against exposure to damage. Secure pallets from falling over.

Do not exceed the maximum height of pallets to be stacked, as indicated on the pallet packaging.

Store pallets in a ventilated, rain-proof and dry location until the Modules are ready to be unpacked.

Please unpack the package of JA Solar Modules according to “JA Solar Modules Un-Pack Instruction”.

Do not lift the Modules by grasping the Module’s junction box or electrical leads in any condition.

Do not stand or step on the Modules.

Do not drop the Modules on another Module.

Do not place any heavy objects on the Modules to avoid glass breakage.

Be cautious when setting the Modules down on to a surface, especially on the corner of the Modules.

Inappropriate transport and installation may break the Modules.

Do not attempt to disassemble the Modules, and do not remove any attached nameplates or components from the Modules.

Do not apply paint or adhesive to the Modules top surface.

To avoid damage to the backsheet, do not scratch or hit the backsheet.

Do not drill holes in the frame. This may compromise the frame strength and cause corrosion of the frame.

Do not scratch the anodized coating of the frame (except for grounding connection). It may cause corrosion of the frame or compromise the frame strength.

Do not attempt to repair the Modules with damaged glass.

The scrapped modules shall be recovered and disposed by the qualified institution.

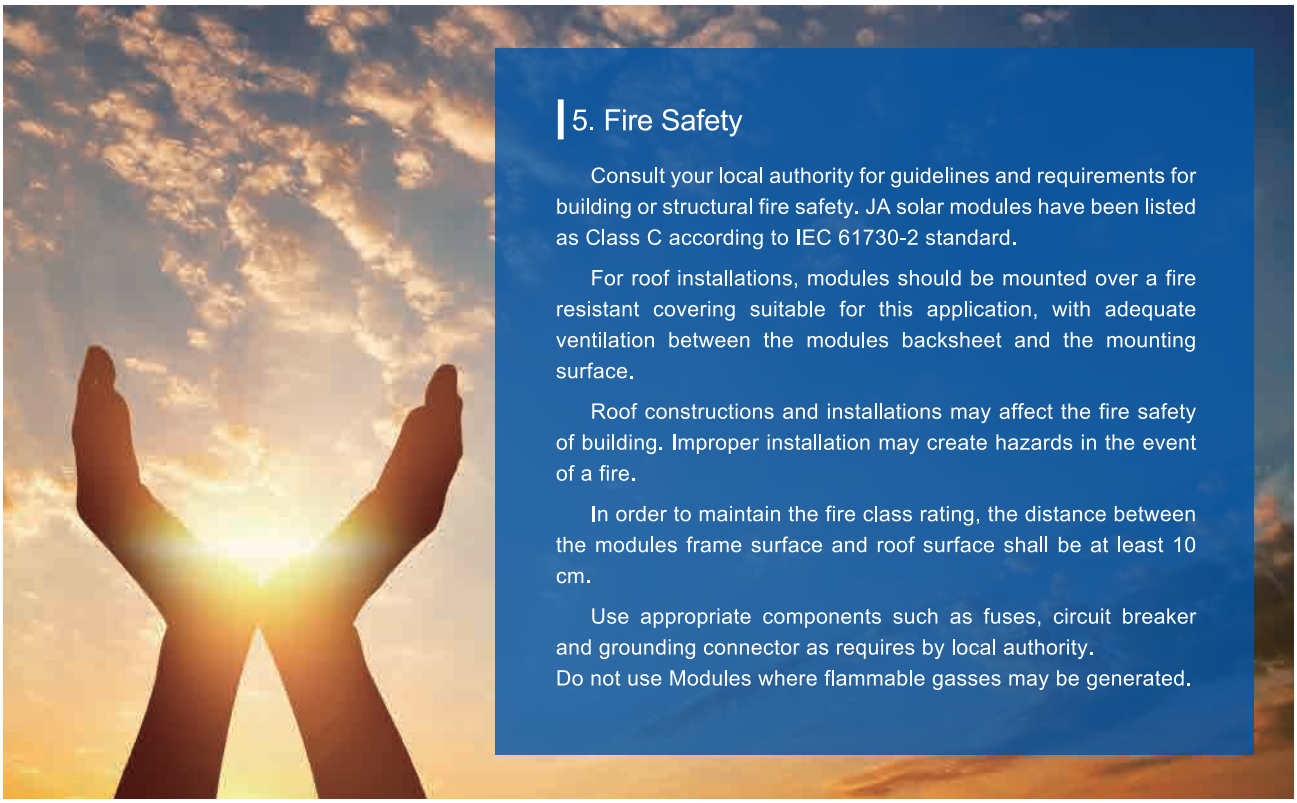

5. Fire Safety

Consult your local authority for guidelines and requirements for building or structural fire safety. JA solar modules have been listed as Class C according to IEC 61730-2 standard.

For roof installations, modules should be mounted over a fire resistant covering suitable for this application, with adequate ventilation between the modules backsheet and the mounting surface.

Roof constructions and installations may affect the fire safety of building. Improper installation may create hazards in the event of a fire.

In order to maintain the fire class rating, the distance between the modules frame surface and roof surface shall be at least 10 cm.

Use appropriate components such as fuses, circuit breaker and grounding connector as requires by local authority.
Do not use Modules where flammable gasses may be generated.

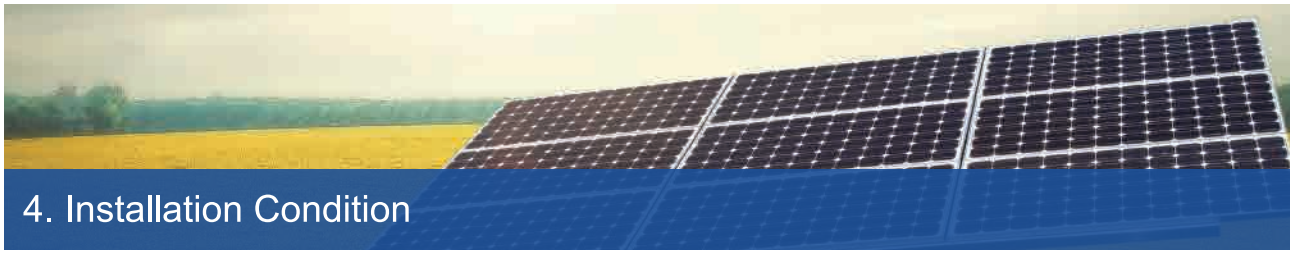

4. Installation Condition

1. Installation position and working environment

JA Solar Modules are intended for use in terrestrial applications only-no outer space use.

Do not use mirrors or other magnifiers to concentrate sunlight onto the modules.

Modules must be mounted on appropriate mounting structures positioned on suitable buildings, the ground, or other structures suitable for modules (e.g. carports, building facades or PV trackers).

Modules must not be installed in locations where they could be submerged in water.

The recommended ambient temperature should be within –20°C(-4°F) to 46°C(115°F).The temperature limits are defined as the monthly average high and low of the installation site. The limit operating temperature should be–40°C (-40°F) and 85°C (185°F).

Ensure Modules are not subject to wind or snow loads exceeding the maximum permissible loads.

The Modules should be installed in a location where there's no shading throughout the year. Ensure there's no obstacle to block light near the installation site.

Lightning protection is recommended for PV systems that are to be installed in locations with high probability of lightning strikes.

Do not use Modules near equipment or in locations where flammable gasses may be generated or collected.

Modules must not be installed or operated in areas where, salt, hail, snow, sand, dust, air pollution, chemically active vapors, acid rain, soot, etc., are excessive. Modules must not be sited in locations where aggressive substances such as salt or salt-water, or any other type of corrosive agent, could affect the safety and/or performance of the Modules.

Please adopt appropriate measures to ensure the performance and safety of the Modules when they are installed or operated in the areas where produces heavy snow, extremely cold, strong wind, or near the island or desert where is prone to produce salt fog, or near water.

JA Solar Modules have passed the IEC 61701 salt-mist, but galvanic corrosion can occur between the aluminum frame of the Modules and mounting or grounding hardware if such hardware is comprised of dissimilar metals. JA Solar Modules can be installed in seaside that distance is 50m to 500m between sea, that only stainless steel and aluminum metal directly contact Modules in seaside installation to limit corrosion. For the detailed requirements need follow JA Solar seaside installation instructions.

2. Tilt Angle Selection

The tilt angle of the Modules is measured between the surface of the Modules and a horizontal ground surface. The Modules generates maximum power output when it faces the sun directly.

In the northern hemisphere, Modules should typically face south, and in the southern hemisphere, Modules should typically face north.

For detailed information on the best installation angle, please refer to standard solar photovoltaic installation guides or consult a reputable solar installer or systems integrator.

Dust building up on the surface of the Modules can impair with Modules performance. JA solar recommends installing the Modules with a tilt angle of at least10 degrees, making it easier for dust to be washed off by rain.

5. Mechanical Installation

1. Conventional requirements

Ensure the installation method and supporting system of Modules is strong enough to make the modules can withstand all the load conditions. The Installer must provide this guarantee. The installation supporting system must be tested by the third-party organization with the analysis ability of Static Mechanical, according to the local national or international standards such as DIN1055 or equivalent standards.

The Modules mounting structure must be made of durable, corrosion-resistant and UV-resistant material.

Modules must be securely attached to the mounting structure.

In regions with heavy snowfall in winter, select the height of the mounting system. So that the lowest edge of the Modules is not covered by snow for any length of time. In addition, ensure that the lowest portion of the Modules is placed high enough so that it is not shaded by plants or trees or damaged by flying sand.

When the Modules are supported parallel to the surface of the building wall or roof, a minimum clearance of 10 mm between the Modules frame and the surface of the wall or the roof is required to allow air to circulate behind the Modules and to prevent wiring damage.

Do not attempt to drill holes in the glass surface and the Modules frames of the Modules as this will void the warranty.

Before installing Modules on a roof, ensure that the roof construction is suitable. In addition, any roof penetration required to mount the Modules must be properly sealed to prevent leaks.

Observe the linear thermal expansion of the Modules frames, must ensure that the minimum distance between neighboring frames is 10mm.

The frames will warps at low temperature.

Avoid the frame receiving the lateral tension and pressure, and avoid the frame off or crushing the glass.

Always keep the backsheet of panel free from foreign objects or structural elements, which could come into contact with the panel, especially when the panel is under mechanical load.

Modules have been certified for a maximum static load on the back side of 2400 Pa(i.e. wind load) and a maximum static load on the front side of either 2400 Pa or 5400 Pa(i.e. wind and snow load), depending on the modules type (please refer to Figure 4 for detailed installation method).

The mounting method must not result in the direct contact of dissimilar metals with the aluminum frame of the Modules that will result in galvanic corrosion. An addendum to UL Standard 1703 “Flat Plate Photovoltaic Modules and Panels”, which recommends metal combinations not exceed an electrochemical potential difference of 0.6 Volts.

Modules can be mounted in landscape or portrait orientation.

2. Installation methods

Modules can be installed to the racks by clamps or hooks. Modules must be installed according to the following examples and recommendation. If not mounting the Modules according to these instructions, please in advance consult JA Solar and must be approved by JA solar, otherwise may damage Modules and void the warranty.

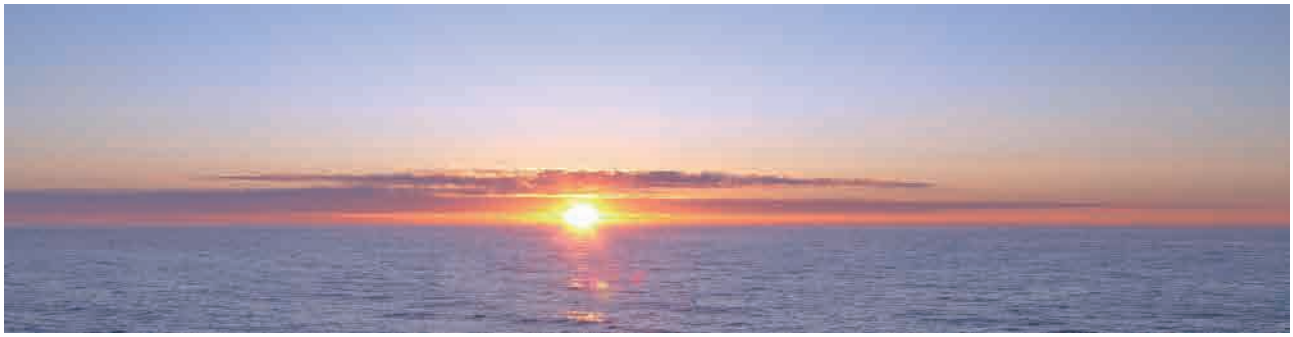

1. Modules installed with mounting hole

Modules should be bolted to support structures through mounting holes located in the frame's back flanges. Refer to what is shown in Figure 2 (Mounting Details).

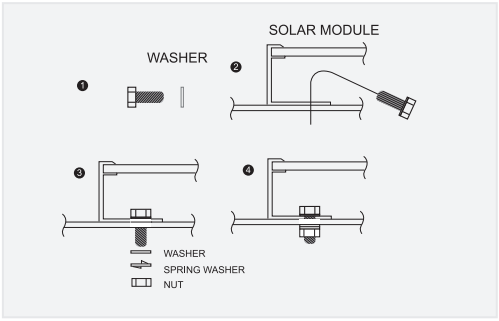

Figure 2 Mounting Details

For your reference, please use the components specified in below:	
1. Bolt	2. Washer
Material: Stainless Steel Size and Length: M8*16mm	Material: Stainless Steel Size: M8
3. Spring Washer	4. Nut
Material: Stainless Steel	Material: Stainless Steel
Size: M8	Size: M8
Recommended torque is between 14N.m to 20N.m.	

2 Modules installed with clamp

Modules should be mounted using specialized clamps as shown in Figure 3.

A. Modules should be attached on a supporting structure rail by metal clamps. It is recommended to use the clamps under the following condition or approved by system installation:
Width: Clamp A no less than 50mm Clamp B no less than 38mm;
Thickness: No less than 3mm;
Material: Aluminum Alloy;
Bolt: M8;

B. The torque range of screw tightening is between 18N.m to 24N.m

C. The Modules clamps must not contact the front glass or deform the frame in any way, the contact area of clamp with the front of frame must be smooth, otherwise maybe damage the frame bring about the modules broken. Avoid shading effects from the Modules clamps. Drainage holes on the Modules frame must not be closed or obscured by the clamps.

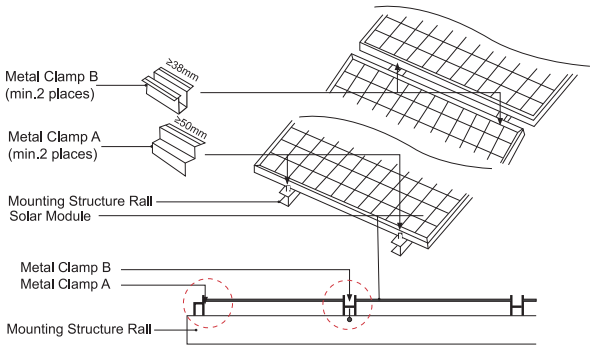

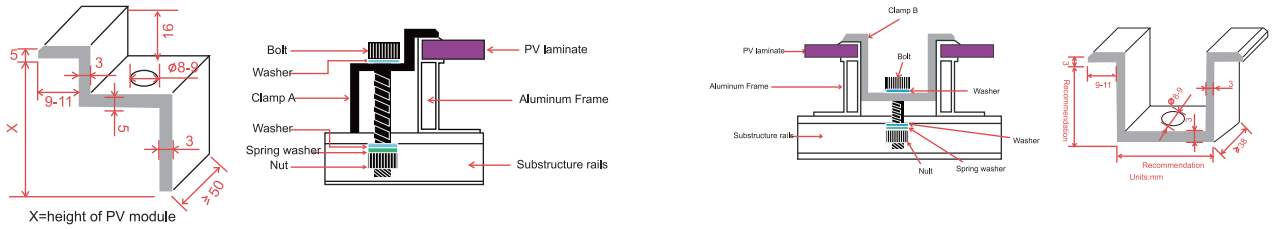

Clamp A Figure 3 Clamp Details (Units:mm) Clamp B

3. Description of the installation position

The low/normal level of load condition is applicable to the installation in most of environmental conditions: the maximum static load on the back of the modules is 2400 Pa(i.e. wind load), and the maximum static load on the front of modules is 2400 Pa (i.e. wind and snow load).

The high level of load condition is applicable to the installation in harsher environmental conditions such as storm, heavy snow, etc: the maximum static load on the back of the modules is 2400 Pa (i.e. wind load), and the maximum static load on the front of modules is 5400 Pa (i.e. wind and snow load), depending on the pressure level that it would endure according to IEC standard.

For the dynamic loads, such as wind, the safety factor needs to be increased by 3 times. It means that the maximum dynamic load is 800 Pa when the wind speed is less than 130 km/h.

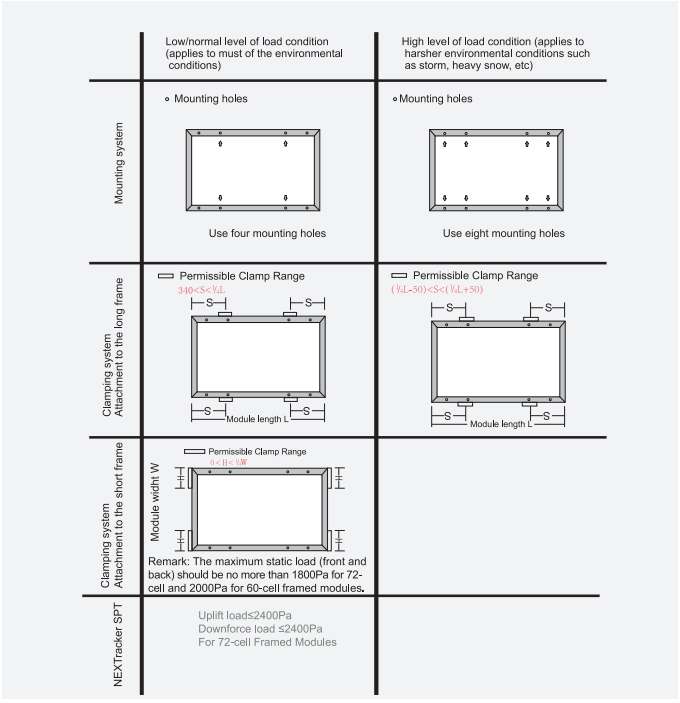

Figure 4 Installation Methods

6. Electrical Installation

1. Electrical Property

Rated electrical characteristics such as Pmax is within +/- 3 % and Voc within +/-2% and Isc within +/-4% of tolerance values at Standard Test Conditions. Standard Test Conditions: 1000W/m² Irradiance, 25℃ Cell Tempertature and 1.5 Air Mass.

Under normal conditions, the photovoltaic Modules may experience conditions that produce more current and/or voltage than reported at Standard Test Conditions. Accordingly, the values of short circuit current, Isc, and open circuit voltage, Voc, marked on Modules should be multiplied by a factor of 1.25 when determining component voltage ratings, conductor capacities, fusing sizes, and size of controls connected to the Modules output.

Voltages are additive when Modules are connected directly in series, and Modules currents are additive when Modules are connected directly in parallel, as illustrated in Figure 5.

Modules with different electrical characteristics must not be connected directly in series.

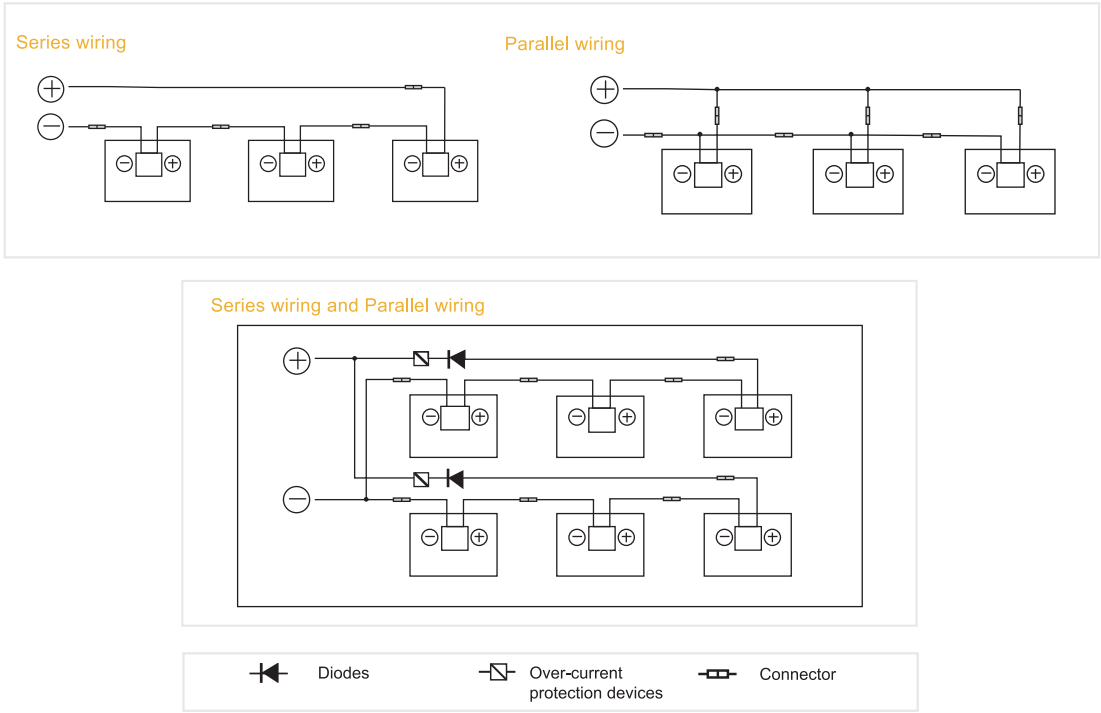

Figure 5: Electrical diagrams of series and parallel wiring

The maximum number of Modules that can be connected in a series string must be calculated in accordance with applicable regulations in such a way that the specified maximum system voltage (The maximum system voltage of JA Solar Modules is DC 1000V/1500V according to the safety appraisal of the IEC61730) of the Modules and all other electrical DC components will not be exceeded in open-circuit operation at the lowest temperature expected at the PV system location.

Correction factor for the open-circuit voltage can be calculated based on the following formula: $C_{Voc}=1-\beta_{Voc}\times(25-T)$. T is the lowest expected ambient temperature at the system location. β(%/℃) is the temperature coefficient of the selected module Voc (refer to corresponding datasheet).

An appropriately rated over-current protection device must be used when the reverse current could exceed the value of the maximum fuse rating of the Modules (20A). An over-current protection device is required for each series string if more than two series strings are connected in parallel, as illustrated in Figure 5.

2. Cables and Wiring

These junction boxes have been designed to be easily interconnected in series for their well-connected cable and the connector with IP67 protection grade. Each Modules has two single-conductor wires, one positive and one negative, which are pre-wired inside the junction box. The connectors at the opposite end of these wires allow easy series connection of adjacent Modules by firmly inserting the positive connector of a Module into the negative connector of an adjacent Module until the connector is fully seated.

Use field wiring with suitable cross-sectional areas that are approved for use at the maximum short-circuit current of the Modules. JA Solar recommends installers use only sunlight resistant cables qualified for direct current (DC) wiring in PV systems. The minimum wire size should be 4mm^2.

Rating Required Minimum Field Wiring

Testing Standard	Wire size	Temperature Rating
EN 50618:2014	4mm^2	- 40ºC to +90ºC

Cables should be fixed to the mounting structure in such a way that mechanical damage of the cable and/or the Modules is avoided. Do not apply stress to the cables. The minimum cables bending radius should be 38.4mm. Any cable damage caused by bending too much or cable management system is not covered under JA Solar's warranty. For fixing, use appropriate means, such as sunlight resistant cable ties and/or wire management clips specifically designed to attach to the Modules frame. While the cables are sunlight resistant and waterproof, where possible, avoid direct sunlight exposure and water immersion of the cables.

3. Connectors

Keep connectors dry and clean, and ensure that connector caps are hand tight before connecting the Modules. Do not attempt making an electrical connection with wet, soiled, or otherwise faulty connectors. Avoid sunlight exposure and water immersion of the connectors. Avoid connectors resting on the ground or roof surface.

Faulty connections can result in arcs and electrical shock. Check that all electrical connections are securely fastened. Make sure that all locking connectors are fully engaged and locked.

4. Bypass Diodes

The junction boxes used with JA Solar Modules contain bypass diodes wired in parallel with the PV cell strings. In the case of partial shading, the diodes bypass the current generated by the non-shaded cells, thereby limiting Modules heating and performance losses. Bypass diodes are not over-current protection devices.

In the event of a known or suspected diode failure, installers or maintenance providers should contact JA Solar. Never attempt to open the junction box by yourself.

7. Grounding

JA Solar Modules use an anodic oxidized aluminum frame to resist corrosion. So the frame of Modules should be connected to the equipment grounding conductor to prevent thunder and electrical shock.

The grounding device should fully contact with the inside of the aluminum alloy, and should penetrate the surface of the frame oxidation film.

Please don't drill any additional grounding hole on the frame of the Modules, otherwise JA Solar expressly disclaim liability for invalidness of the warranty.

For optimal performance, JA Solar recommend the DC cathode of the Modules array is connected to ground. Failure to comply with this requirement may reduce the performance of the system.

The grounding method should not result in the direct contact of dissimilar metals with the aluminum frame of the Modules that will result in galvanic corrosion. Metals with the aluminum frame of the Modules that will result in galvanic corrosion. An addendum to UL Standard 1703 "Flat Plate Photovoltaic Modules and Panels" recommends metal combinations not exceed an electrochemical potential difference of 0.6 Volts.

The frame rails have pre-drilled holes marked with a grounding sign. These holes should be used for grounding purposes and should not be used for mounting the Modules.

The following grounding methods are available.

1.Grounding by using grounded clamp

There is a grounding hole with 4.2 mm diameter on the edge side closer to the middle of the back frame of the Modules. The middle line of the grounding mark is overlapped with the grounding hole, and the direction is same as the longer frame.

The grounding between Modules must be approved by qualified electrician. And the grounding device should produced by qualified electrical manufacture. The recommended twist torque value is 2.3 N·m. A copper core in size of 12 AWG can be used as grounding clamp. The copper wire should not be compressed during the installation.

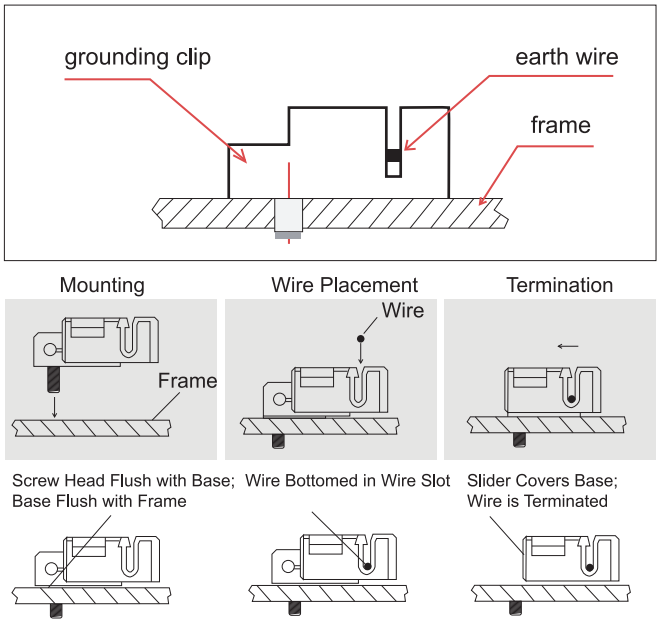

Figure 6: Installation Methods

Note: The figure above is using TYCO. 1954381-1 (recommended)

2. Grounding by using unused mounting hole

The existing mounting holes which have not been used can be used for grounding.

A. Direct the grounding clamp to the mounting holes in the frame. Thread the grounding clamp and the frame with grounding bolt.

B. Put the toothed gasket into the other side, then tighten and lock the nut. The recommended torque of locking the nut is 2.0 N•M-2.2 N•M.

C. Thread the grounding clamp with grounding wire. The materiel and size of grounding wire should meet the relevant requirements of the national, regional and local rule, law and standard.

D. Finish the mounting with tightening the binding bolt of grounding wire.

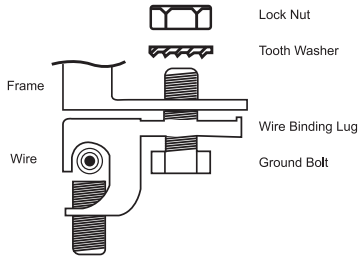

Figure 7: Installation Methods

3. Additional Third-party Grounding Devices

JA Solar Modules can be grounded using third party grounding devices so long as they are certified for grounding modules and the devices are installed according to the manufacture's specified instructions.

8.Operation and Maintenance

It is required to perform regular inspection and maintenance of the Modules, especially within warranty scope. It is the user's responsibility to report to the supplier regarding the damages found within 2 weeks.

1.Cleaning

The dust accumulated on the front transparent substrate may reduce the power output, and may even cause regional hot-spot effect. The industrial effluents or bird drops may be serious cases, and the extent of the severity depends on the transparency of the foreign objects. It's usually not dangerous of the accumulated dust to reduce the sunshine, because the light intensity is still homogeneous and the power reduction usually is not obvious.

When Modules are the work, there should exist environmental influence factors to cast shadows and cover part or even all of the Modules, such as other Modules, system support, bird drops and a lot of dust, clay or plant and so on, these may distinctly reduce the power output. JA Solar advises that there should be no obstructed object over the Modules surface at any time.

The cleaning frequency depends on the accumulating velocity of the fouling. In many instances the front subs substrate goes cleaned with the rain, and we can decrease the cleaning frequency. It is recommended to wipe the glass surface with wet sponge or soft cloth. Please do not clean the glass with cleaning agent which contains acid or alkali.

2.The visual inspection of the Modules

Inspect the Modules visually to find if there are appearance defect, the following two types need more attention especially:

A. Whether the glass is broken;

B. Corrosion along the cells' bus-bar. The corrosion is caused by the dampness infiltrated into the Modules when the surface encapsulation material damaged during the installation or transportation.

C. If there is burning vestige on the backsheet.

Inspection of the connector and the cable

It's recommended to implement the following preventive maintenance every 6 months:

A. Check the encapsulation of the connector with the cable.

B .Check the sealing gel of the junction box to ensure if it is crack or crevice.

PRODUCT SUPPLEMENT

The installation manual applicable module types are as follows. The modules types are subject to changes without prior notice due to continuous product innovation, research and development.

"XXX" shows the PEAK power of the Module Label in increment of 5.

Module Type	Peak power [W]	Dimension (L×W×H) [mm]	
		TUV	UL
JAM60S01-XXX/PR	305-325	1650×991×35	1650x991x35
JAM72S01-XXX/PR	365-385	1960×991×40	1960x991x40
JAP60S01-XXX/SC	265-285	1650x991x35	1650x991x35
JAP72S01-XXX/SC	320-340	1960x991x40	1960x991x40
JAM60S03-XXX/PR	315-335	1678×991×35	1678×991×35
JAM72S03-XXX/PR	370-390	2000×991×40	2000×991×40
JAP60S03-XXX/SC	270-290	1678×991×35	1678×991×35
JAP72S03-XXX/SC	325-345	2000×991×40	2000×991×40
JAM60S09-XXX/PR	310-330	1657×996×35	1666×1005×35
JAM72S09-XXX/PR	370-390	1979×996×40	1988×1005×40
JAP60S09-XXX/SC	270-290	1657×996×35	1666×1005×35
JAP72S09-XXX/SC	325-345	1979×996×40	1988×1005×40
JAM60S10-XXX/PR	325-340	1689×996×35	1698×1005×35
JAM72S10-XXX/PR	375-400	2015×996×40	2024×1005×40
JAP60S10-XXX/SC	275-295	1689×996×35	1698×1005×35
JAP72S10-XXX/SC	330-350	2015×996×40	2024×1005×40